# Mounting Brackets and Supports

Plastic, for Roller Track Assemblies





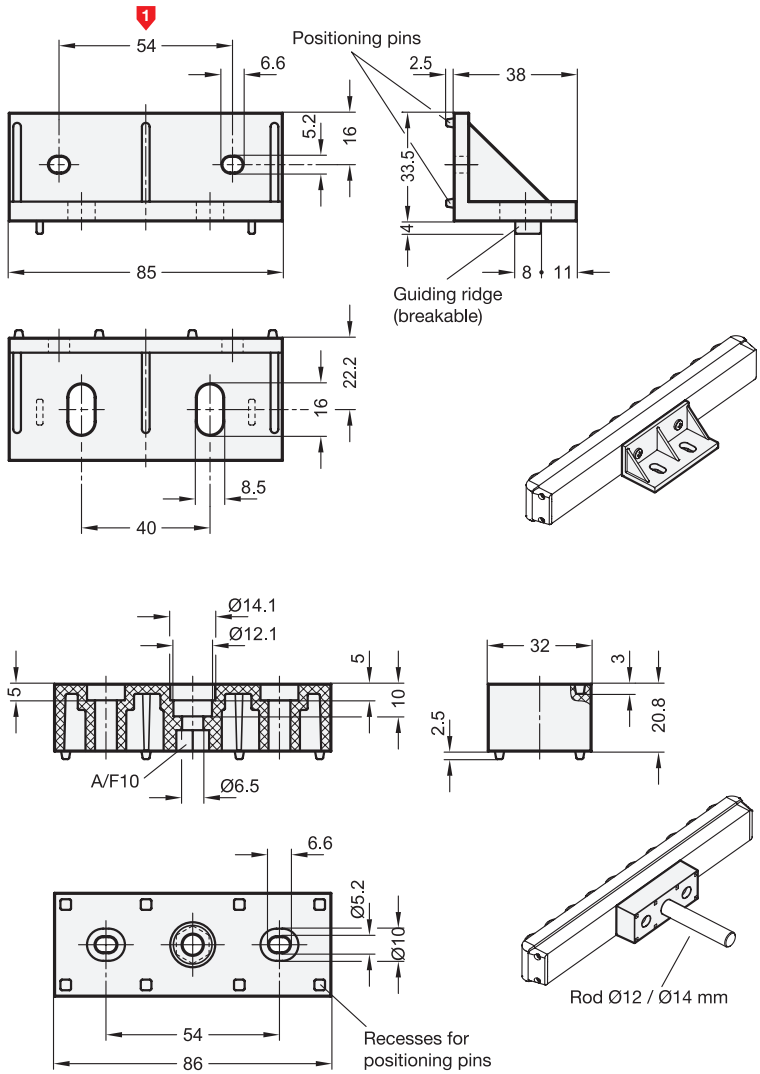


**Metric**

ELESA original design RLT-MB/MS

**2 Type**

**B** Block
**W** Angle

## Specification

**Plastic**, Polyamide (PA)
- Black
- Operating temperature
  -4 °F to 194 °F (-20 °C to 90 °C)

RoHS

| Technical Information | Page |
|---|---|
| Plastic Characteristics | QVX |

Mounting brackets and supports (type W) EN 646.7 can be used to mount roller track assemblies at a right angle to the support surface, e.g. for the sideways transport of the conveyed material through roller track assemblies. The positioning pins engage with the appopriate grooves of the carrier rail profiles EN 646.3, so that the angle is positioned in the correct location bracket and locked in place.

The mounting brackets and supports (type B) expand the mounting options for roller track assemblies. The dimensions match the angles. The positioning pins engage with the appropriate grooves of the carrier rail profiles EN 646.3 or with the appropriate recesses of the angle. Also, a rod with Ø 12 mm can be attached to the mounting block.

| How to order | | |
|---|---|---|
| EN 646.7-54-W (1 = Length, 2 = Type) | 1 | Length |
| | 2 | Type |



WARNING: Cancer and Reproductive Harm — www.P65Warnings.ca.gov