Crank Handles

Plastic, with Mini Revolving Handle, with Blind Bore, Ergostyle®

JW WINCO® A Ganter Company

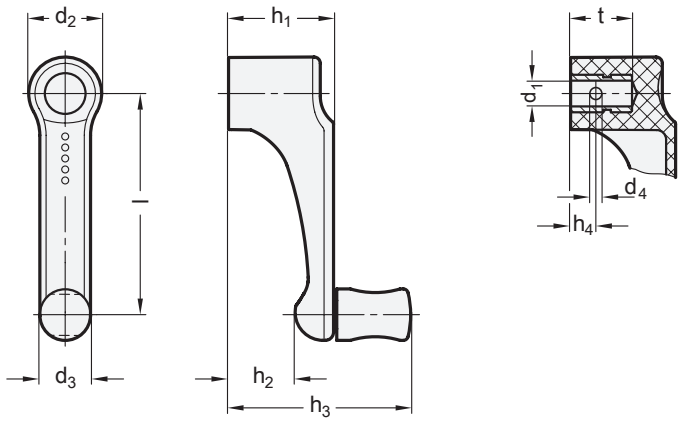

Metric

elesa
Original design ERFW+I

Metric table

Dimensions in: millimeters / inches

1 Length **l**	2 d_1 H9 Bore	d_2	d_3	d_4	h_1	h_2	h_3	h_4	t	Ø Handle
38 1.50	B 6	15.5 0.61	11 0.43	3 0.12	21 0.83	12.5 0.49	41 1.61	7 0.28	15 0.59	12 0.47
56 2.20	B 8	19 0.75	13.5 0.53	4 0.16	28.5 1.12	18.5 0.73	51.5 2.03	8 0.31	20 0.79	13 0.51
71 2.80	B 10	23 0.91	16 0.63	4 0.16	30 1.18	18 0.71	53 2.09	9 0.35	25 0.98	14.5 0.57

Specification

3

Crank body
Plastic, polyamide (PA)
- Glass fiber reinforced
- Operating temperature
  -22 °F to +266 °F (-30 °C to +130 °C)
- Black, RAL 9005, matte finish ● **SW**

Hub bushing
Brass

Revolving knob
Plastic, polyamide (PA)
- Black, matte finish
- Spindle
  Steel, zinc plated, blue passivated finish

RoHS

Attaching the crank handle EN 670.2 on a shaft using a transverse pin or a set screw is made easier with the semilateral cross bore.
The finger recesses of the rotating cylinder head allows a safe grip and the ergonomic operation of the relatively small crank handle.
Resistant to solvents, oils, grease and other chemical agents.

Technical Information	Page
Product Family Ergostyle®	QVX
ISO Fundamental Tolerances	QVX
Plastic Characteristics	QVX

How to order

EN 670.2-38-B6-SW (1 2 3)

1	Length l
2	Bore d_1
3	Color

WARNING: Cancer and Reproductive Harm — www.P65Warnings.ca.gov