Indexing Plungers

Steel / Stainless Steel, Lock-Out, with Mounting Flange, with Latch

JW WINCO® A Ganter Company

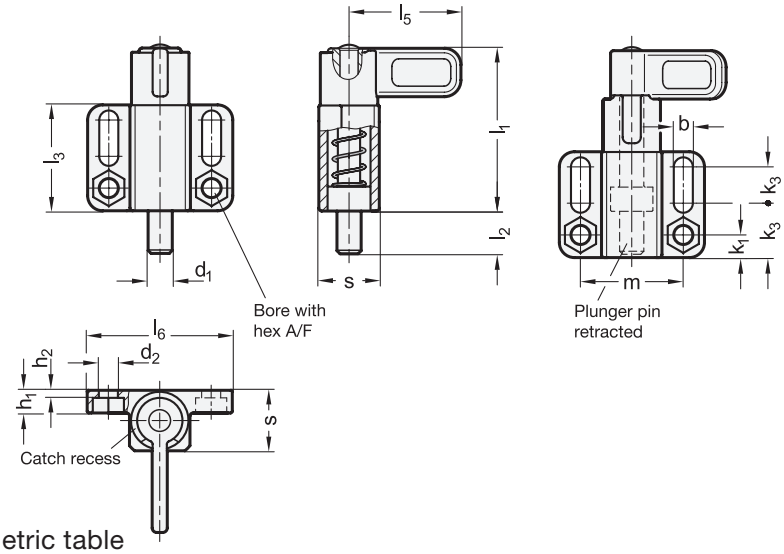

Metric

SS Stainless Steel

3 Type

E With latch, lock-out

Metric table

Dimensions in: millimeters / inches

1 d_1 Pin $^{-0.05}_{-0.25}$ Bore $^{+0.1}_{+0.3}$	2 s	b +0.3	d_2 +0.3	h_1	h_2	k_1	k_2	k_3	l_1 ≈	l_2	l_3	l_5	l_6	m	A/F	Spring load ≈ Initial	Spring load ≈ End
8 0.315	20 0.79	6.1 0.240	6.1 0.240	7.5 0.30	1.5 0.06	7.5 0.30	18 0.71	12 0.47	54 2.13	14 0.55	35 1.38	37 1.46	48 1.89	34 1.34	10	14 N 3.15 lbf	35 N 7.87 lbf
10 0.394	20 0.79	6.1 0.240	6.1 0.240	7.5 0.30	1.5 0.06	7.5 0.30	18 0.71	12 0.47	54 2.13	14 0.55	35 1.38	37 1.46	48 1.89	34 1.34	10	14 N 3.15 lbf	35 N 7.87 lbf
12 0.472	20 0.79	6.1 0.240	6.1 0.240	7.5 0.30	1.5 0.06	7.5 0.30	18 0.71	12 0.47	54 2.13	14 0.55	35 1.38	37 1.46	48 1.89	34 1.34	10	14 N 3.15 lbf	35 N 7.87 lbf
14 0.551	20 0.79	6.1 0.240	6.1 0.240	7.5 0.30	1.5 0.06	7.5 0.30	18 0.71	12 0.47	54 2.13	14 0.55	35 1.38	37 1.46	48 1.89	34 1.34	10	14 N 3.15 lbf	35 N 7.87 lbf
16 0.630	30 1.18	10.1 0.398	10.1 0.398	15 0.59	5 0.20	14 0.55	34 1.34	10 0.39	83 3.27	20 0.79	54 2.13	55 2.17	80 3.15	55 2.17	17	22 N 4.95 lbf	70 N 15.74 lbf
20 0.787	30 1.18	10.1 0.398	10.1 0.398	15 0.59	5 0.20	14 0.55	34 1.34	10 0.39	83 3.27	20 0.79	54 2.13	55 2.17	80 3.15	55 2.17	17	22 N 4.95 lbf	70 N 15.74 lbf

Specification

4

Guide
- Steel precision casting
  - Zinc plated, blue passivated finish **ZB**
  - Zinc plated and powder coated Black, RAL 9005, textured finish ● **SW**
- Stainless steel precision casting AISI 316 **A4**

Latch
- Steel precision casting
  Zinc plated, blue passivated finish for ZB / SW
- Stainless steel precision casting AISI 316 for A4

Plunger pin
- Steel
  Zinc plated, blue passivated finish for ZB / SW
- Stainless steel AISI 316 for A4

Spring
Stainless steel AISI 316Ti

RoHS

With indexing plungers GN 722.6, the plunger pin is actuated via the latch. The ZB and SW versions are designed for applications in steel construction. The A4 stainless steel version is suitable for use in particularly aggressive environments.

The type with rest position is used when the plunger pin should temporarily not protrude. For this purpose, the latch is turned sideways after the locking pin has been retracted. The latch is held in this position by the catch recess at the top of the guide.

The dimensional tolerances between plunger pin and guide are selected so that the functional reliability is guaranteed even with rough applications or in case of contamination.

For fastening, slotted or hexagonal mounting holes allow the use of socket cap screws ISO 4762 and hex screws or nuts according to DIN 931 or DIN 934.

Technical Information	Page
Load Rating Information	QVX
Stainless Steel Characteristics	QVX

How to order

1 2 3 4

GN 722.6-16-30-E-ZB

1	Pin diameter d_1
2	Square s
3	Type
4	Finish

WARNING: Cancer and Reproductive Harm — www.P65Warnings.ca.gov